POLLOCK INDUSTRIES

Technical Data Sheet

960W 48V Three Phase Industrial DIN RAIL with PFC Function

UNIT CODE	DESCRIPTION
C-TDR 960-48	**960 Watt, 48V, Three Phase, Single Output, Compact DIN RAIL Power Supply with PFC and Parallel Function**

SPECIFICATIONS		
AC Input	**Output**	**Approvals**
Three-Phase (340~550VAC Input Range)	+48VDC @ 0~20A	Parallel PFC UL CB CE

Features at a Glance:

Three-Phase 340 ~ 550VAC
(Dual phase operation possible) 480 ~ 780VDC

Current sharing up to 3840W (3+1)

High efficiency 94.5% and low power dissipation

Built-in: active PFC function, PF>0.94, Constant current limiting circuit, DC OK relay contact (alarm), Front panel DC voltage adjustment (100~115%), LED indicator for power ON

Wide operational temperature range -30 ~ +70ºC

Slim (110mm) Installed on DIN rail TS35 / 7.5 or 15

Protections: Short circuit / Over load / Over voltage / Over temp.

Quiet - Cooling by natural (free air) convection

100% full load burn-in test & 3 year warranty

Safety standards & EMC: UL508 approved, IEC60950-1 CB approved by SIQ
N61000-6-2 (EN50082-2) industrial immunity level

Certificates: UL / CB / CE

MTBF hours: 59.4K hrs. MIL-HDBK-217F (25°C)

Case: 214A

Weight: 5.4 Lbs. (2.47 Kgs)

Dimensions: 4.3“ W x 4.9“ H x 5.9“ D
110 x 125.2 x 150mm (W*H*D)

The C-TDR-960 series is a three phase industrial DIl rail power supply with built-in PFC function, a compact design (110mm wide), high efficiency (94% and parallel function.

C-TDR960 features a 340~550VAC input range for use in general three phase power systems. It can be operated at the full load of 960W at up ambient temperatures up +50°C (or up to +70°C with some derating). With an overload protection function designed as constant current limiting and delayed shutdown, C-TDR-960 can be used in all kinds of critical loading conditions, such as inductive or capacitive loads. Functions include DC OK relay contact alarm signal output, parallel function (up to 4 units), as well as protections for short-circuit, over load, over voltage, and over temperature.

Suitable applications include include industrial control systems, semi-conductor fabrication equipment, factory automation, electro-mechanical applications, and any installations with requirements for fan-less or low noise operation.

Pricing		
	1-9	$ 659.00
	10+	$ 627.50
	25+	$ 599.00

POLLOCK INDUSTRIES, INC. 81 Butternut Road, White River, VT 05001
toll-free 1-866-665-5434 (603) 888-2467 sales@pollock.biz

960W Three Phase Industrial DIN RAIL with PFC Function

TDR-960 series

■ Features :

- Three-Phase 340 ~ 550VAC wide range input (Dual phase operation possible)
- Width only 110mm
- Built-in active PFC function compliance to EN61000-3-2
- High efficiency 94.5% and low power dissipation
- Protections: Short circuit / Overload / Over voltage / Over temperature
- Cooling by free air convection
- Built-in constant current limiting circuit
- Can be installed on DIN rail TS-35/7.5 or 15
- UL508(industrial control equipment)approved
- EN61000-6-2(EN50082-2) industrial immunity level
- Current sharing up to 3840W(3+1)
- Built-in DC OK relay contact
- 100% full load burn-in test
- 3 years warranty

SPECIFICATION

MODEL		TDR-960-24	TDR-960-48
OUTPUT	DC VOLTAGE	24V	48V
	RATED CURRENT	40A	20A
	CURRENT RANGE	0 ~ 40A	0 ~ 20A
	RATED POWER	960W	960W
	RIPPLE & NOISE (max.) Note.2	180mVp-p	250mVp-p
	VOLTAGE ADJ. RANGE	24 ~ 28V	48 ~ 55V
	VOLTAGE TOLERANCE Note.3	±1.0%	±1.0%
	LINE REGULATION	±0.5%	±0.5%
	LOAD REGULATION	±1.0%	±1.0%
	SETUP, RISE TIME	1000ms, 100ms/400VAC 800ms, 100ms/500VAC at full load	
	HOLD UP TIME (Typ.)	12ms / 400VAC 14ms / 500VAC at full load	
INPUT	VOLTAGE RANGE Note.4	Three-Phase 340 ~ 550VAC (Dual phase operation possible) 480 ~ 780VDC	
	FREQUENCY RANGE	47 ~ 63Hz	
	POWER FACTOR (Typ.)	PF≧0.88/400VAC PF≧0.86/500VAC at full load	
	EFFICIENCY (Typ.)	94%	94.5%
	AC CURRENT (Typ.)	2A/400VAC 1.4A/500VAC	
	INRUSH CURRENT (Typ.)	COLD START 60A	
	LEAKAGE CURRENT	<3.5mA / 530VAC	
PROTECTION	OVERLOAD	105 ~ 130% rated output power	
		Protection type : Constant current limiting, unit will shut down after 3 sec. ,re-power on to recover	
	OVER VOLTAGE	29 ~ 33V	56 ~ 65V
		Protection type : Shut down o/p voltage, re-power on to recover	
	OVER TEMPERATURE	90℃ ±5℃ (TSW) detect on heatsink of power switch	85℃±5℃ (TSW) detect on heatsink of power switch
		Protection type : Shut down o/p voltage, recovers automatically after temperature goes down	
FUNCTION	DC OK REALY CONTACT RATINGS (max.)	60Vdc/0.3A, 30Vdc/1A, 30Vac/0.5A resistive load	
	CURRENT SHARING	Please refer to function manual	
ENVIRONMENT	WORKING TEMP. Note.5	-30 ~ +70℃ (Refer to "Derating Curve")	
	WORKING HUMIDITY	20 ~ 95% RH non-condensing	
	STORAGE TEMP., HUMIDITY	-40 ~ +85℃, 10 ~ 95% RH	
	TEMP. COEFFICIENT	±0.03%/℃ (0 ~ 50℃)	
	VIBRATION	Component:10 ~ 500Hz, 2G 10min./1cycle, 60min. each along X, Y, Z axes; Mounting: Compliance to IEC60068-2-6	
SAFETY & EMC (Note 4)	SAFETY STANDARDS	UL508 approved, IEC60950-1 CB approved by SIQ	
	WITHSTAND VOLTAGE	I/P-O/P:3KVAC I/P-FG:2KVAC O/P-FG:0.5KVAC O/P-DC OK:0.5KVAC	
	ISOLATION RESISTANCE	I/P-O/P, I/P-FG, O/P-FG:>100M Ohms / 500VDC / 25℃/ 70% RH	
	EMC EMISSION	Compliance to EN55022 (CISPR22), EN61204-3 Class B, EN61000-3-2,-3	
	EMC IMMUNITY	Compliance to EN61000-4-2,3,4,5,6,8,11, EN55024, EN61000-6-2 (EN50082-2), EN61204-3, heavy industry level, criteria A	
OTHERS	MTBF	59.4K hrs min. MIL-HDBK-217F (25℃)	
	DIMENSION	110*125.2*150mm (W*H*D)	
	PACKING	2.47Kg ; 6pcs/15.8Kg/1.47CUFT	

NOTE

1. All parameters NOT specially mentioned are measured at 400VAC input, rated load and 25℃ of ambient temperature.
2. Ripple & noise are measured at 20MHz of bandwidth by using a 12" twisted pair-wire terminated with a 0.1uf & 47uf parallel capacitor.
3. Tolerance : includes set up tolerance, line regulation and load regulation.
4. Dual phase operation is allowed under certain derating to output load. Please refer to derating curves for details.
5. Installation clearances : 40mm on top, 20mm on the bottom, 5mm on the left and right side are recommended when loaded permanently with full power. In case the adjacent device is a heat source, 15mm clearance is recommended.
6. The power supply is considered a component which will be installed into a final equipment. The final equipment must be re-confirmed that it still meets EMC directives.

■ Mechanical Specification

Case No.214A Unit:mm

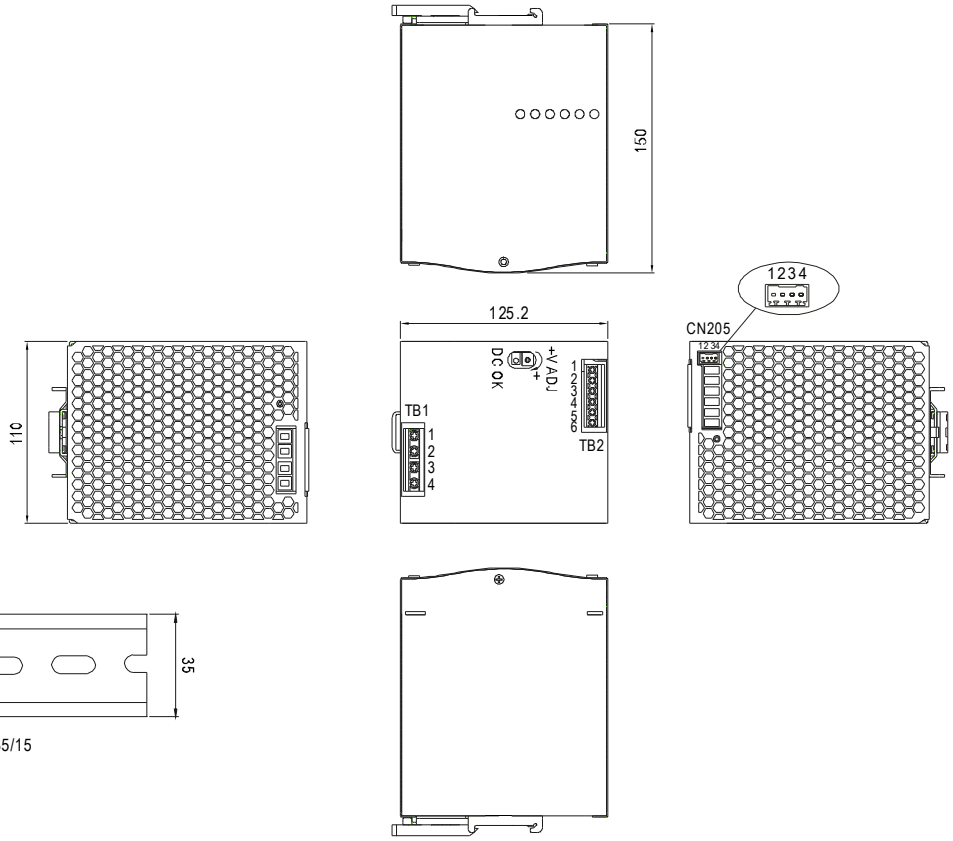

ADMISSIBLE DIN-RAIL:TS35/7.5 OR TS35/15

Terminal Pin No. Assignment (TB1)

Pin No.	Assignment
1	FG ⏚
2	AC/L3
3	AC/L2
4	AC/L1

Terminal Pin No. Assignment (TB2)

Pin No.	Assignment
1,2,3	DC OUTPUT +V
4,5,6	DC OUTPUT -V

Control Pin (CN205) : DINKLE ECH250R-04P or equivalent

Pin No.	Assignment	Mating Housing	Wire Diameter
1	P-(Current Share)	DINKLE ESC250V-04P or equivalent (Including in the single package)	0.081~0.517mm^2 (28~20AWG)
2	P+(Current Share)		
3,4	DC OK Relay Contact		

■ Block Diagram

PFC fosc : 65KHz
PWM fosc : 60KHz

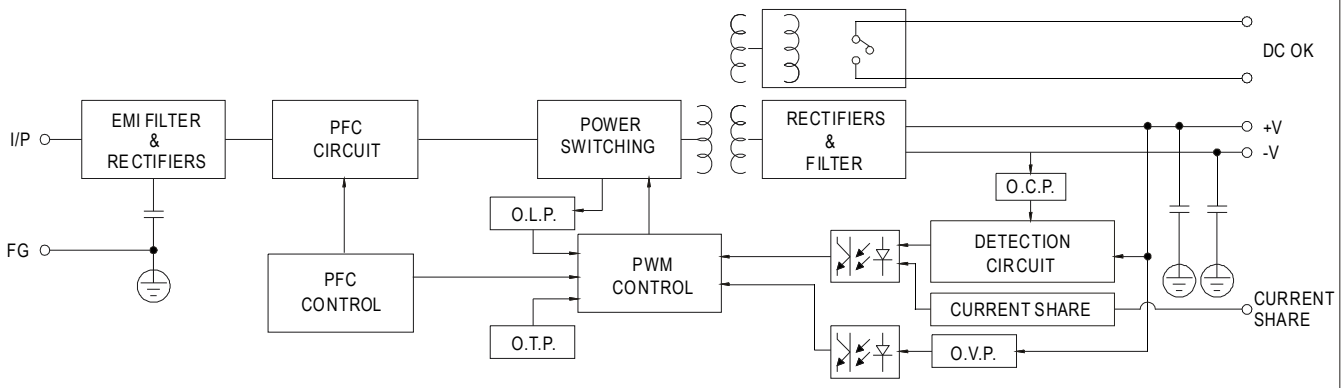

■ DC OK Relay Contact

Contact Close	PSU turns on / DC OK.
Contact Open	PSU turns off / DC Fail.
Contact Ratings (max.)	30V/1A resistive load.

■ Derating Curve

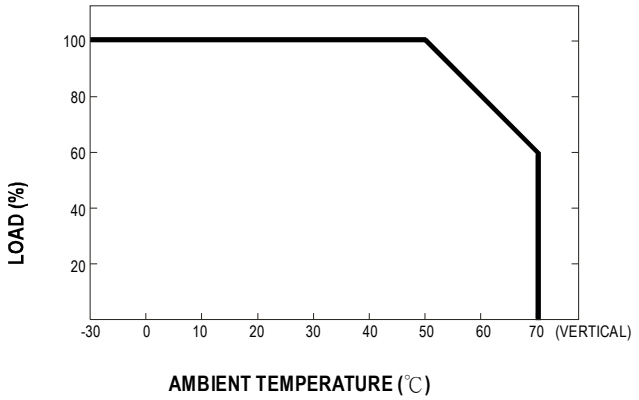

■ Output derating VS input voltage

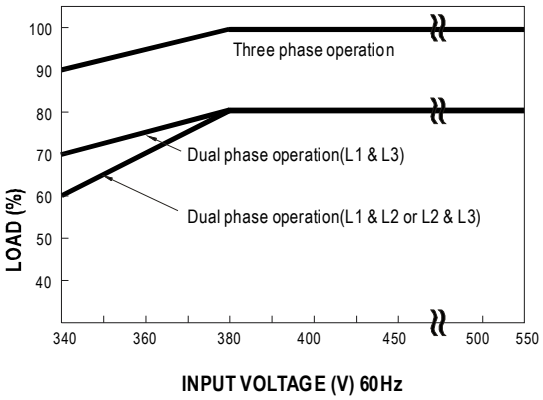

■ Function Manual

1. Current sharing
   (1) Parallel operation is available by connecting the units shown as below (P+,P- are connected mutually in parallel).
   (2) Difference of output voltages among parallel units should be less than 0.2V.
   (3) The total output current must not exceed the value determined by the following equation (Output current at parallel operation)=(The rated current per unit) x (Number of unit) x 0.9.
   (4) In parallel operation 4 units is the maximum, please consult the manufacture for other applications.
   (5) The power supplies should be paralleled using short and large diameter wiring and then connected to the load.
   (6) When in parallel operation, the minimum output load should be greater than 5% of total output load.
   (Min. load >5% rated current per unit x number of unit)
   (7) In parallel connection, maybe only one unit (master) operate if the total output load is less than 5% of rated load condition.
   The other PSUs (slaves) may go into standby mode and their output LEDs & relays will not turn on.
   (8) Some minor noise may be heard at light load condition under parallel operation.
   This is a normal phenomenon and the performance of the PSU will not be influenced.